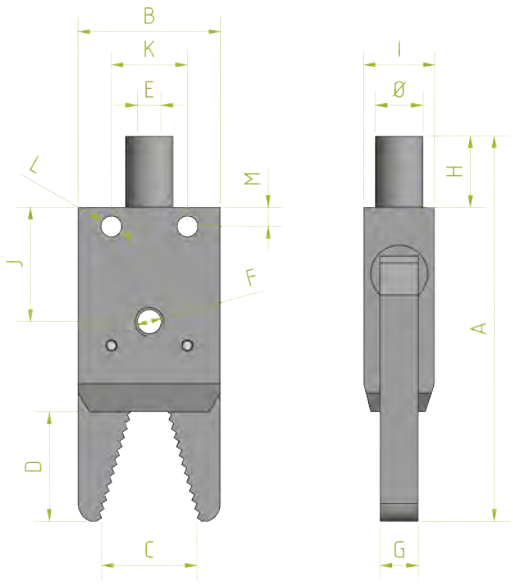

Numer katalogowy	Ø	A	B	C	D	E	F	G	H	I	J	K	L	M	MS
MRGK-3010	10.0	45.0	15.0	6.0	11.5	M5.0	M4.0	3.0	15.0	8.0	10.5				x
MRGK-4010	10.0	55.0	20.0	10.0	15.5	M5.0	M6.0	4.0	15.0	10.0	14.0				x
MRGK-5010	10.0	66.0	25.0	14.0	20.0	M5.0	M6.0	5.0	15.0	12.0	17.5				x
MRGK-6010	10.0	76.0	30.0	18.0	24.5	M5.0	M6.0	6.0	15.0	15.0	21.0				
MRGK-6510	10.0	81.0	30.0	20.0	23.0	M5.0	M6.0	8.0	15.0	15.0	24.0	16.0	4.3	4.0	

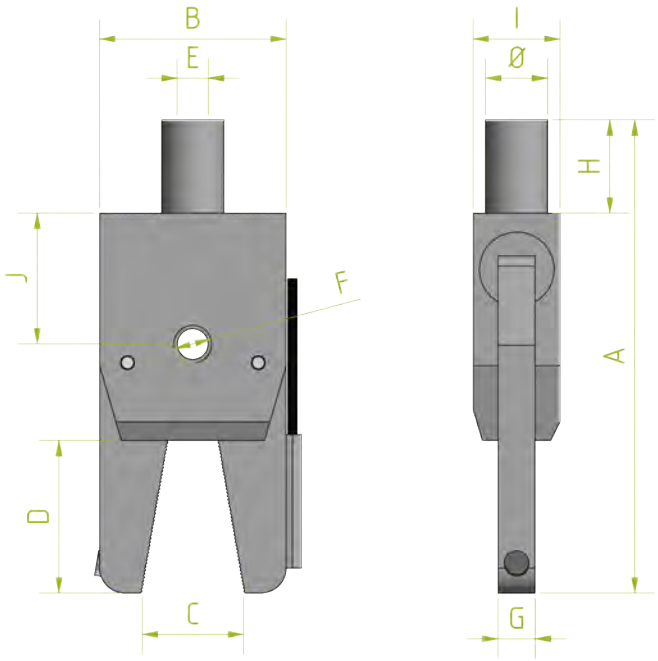

Numer katalogowy	Ø	A	B	C	D	E	F	G	H	I	J
MRGK-4010MS	10.0	55.0	20.0	10.0	15.5	M5.0	M6.0	4.0	15.0	10.0	14.0
MRGK-5010MS	10.0	66.0	25.0	14.0	20.0	M5.0	M6.0	5.0	15.0	12.0	17.5
MRGK-6010MS	10.0	76.0	30.0	17.0	24.5	M5.0	M6.0	6.0	15.0	15.0	21.0

All measurements are in millimeters / Wymiary w milimetrach

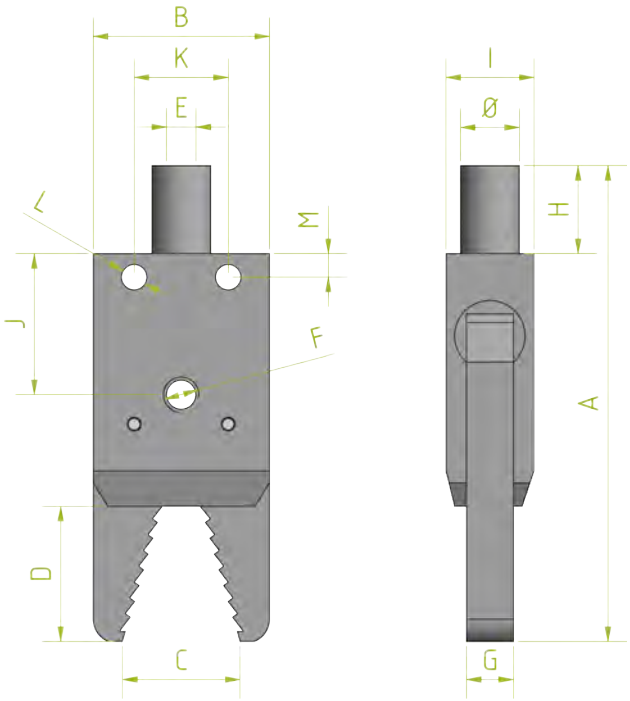

Numer katalogowy	Ø	A	B	C	D	E	F	G	H	I	J	K	L	M
MRGK-4010SZ	10.0	55.0	20.0	10.0	15.5	M5.0	M6.0	4.0	15.0	10.0	14.0			
MRGK-6510SZ	10.0	81.0	30.0	20.0	23.0	M5.0	M6.0	8.0	15.0	15.0	24.0	16.0	4.3	4.0

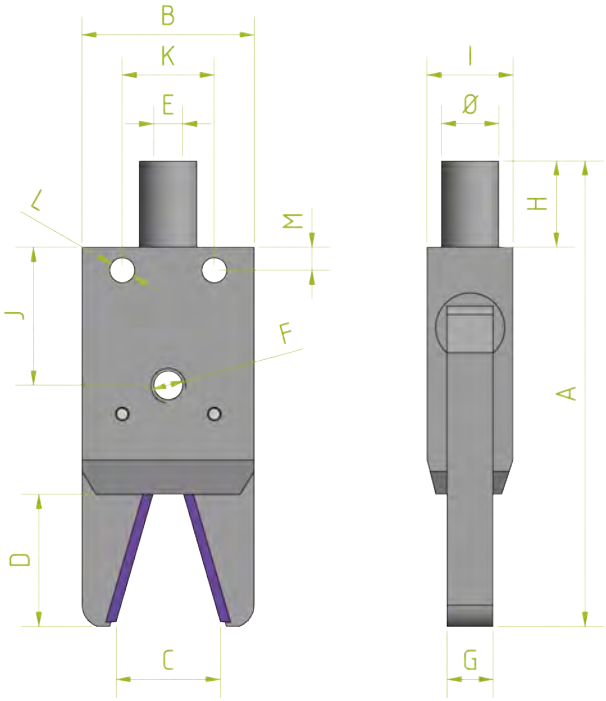

Numer katalogowy	Ø	A	B	C	D	E	F	G	H	I	J	K	L	M
MRGK-4010BG	10.0	55.0	20.0	8.0	15.5	M5.0	M6.0	4.0	15.0	8.0	10.5			
MRGK-6510BG	10.0	81.0	30.0	20.0	23.0	M5.0	M6.0	8.0	15.0	15.0	24.0	16.0	4.3	4.0

All measurements are in millimeters / Wymiary w milimetrach

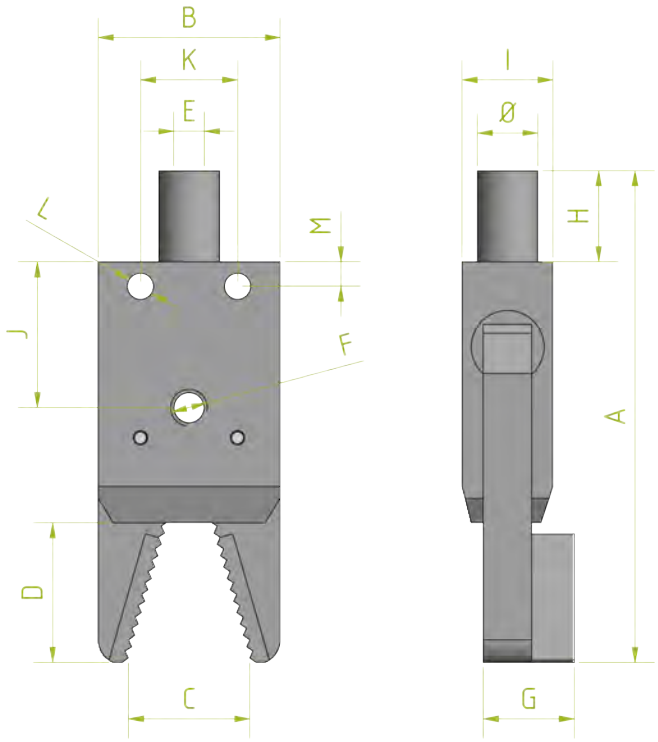

Numer katalogowy	Ø	A	B	C	D	E	F	G	H	I	J	K	L	M
MRMG-6510BB	10.0	81.0	30.0	20.0	23.0	M5.0	M6.0	15.0	15.0	15.0	24.0	16.0	4.3	4.0

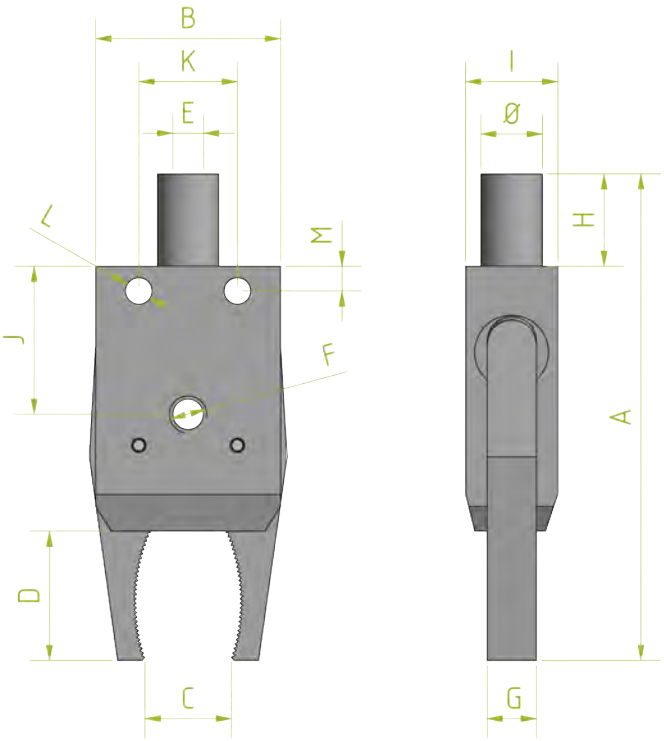

Numer katalogowy	Ø	A	B	C	D	E	F	G	H	I	J	K	L	M
MRMG-6510OV	10.0	81.0	30.0	14.0	23.0	M5.0	M6.0	8.0	15.0	15.0	24.0	16.0	4.3	4.0

All measurements are in millimeters / Wymiary w milimetrach

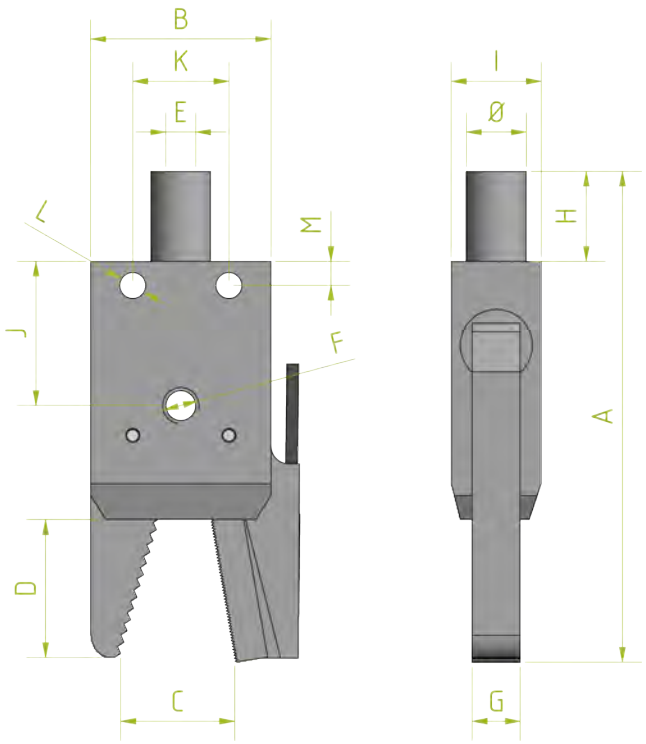

Numer katalogowy	Ø	A	B	C	D	E	F	G	H	I	J	K	L	M
MRMG-6510TS	10.0	81.0	30.0	19.0	23.0	M5.0	M6.0	8.0	15.0	15.0	24.0	16.0	4.3	4.0

All measurements are in millimeters / Wymiary w milimetrach

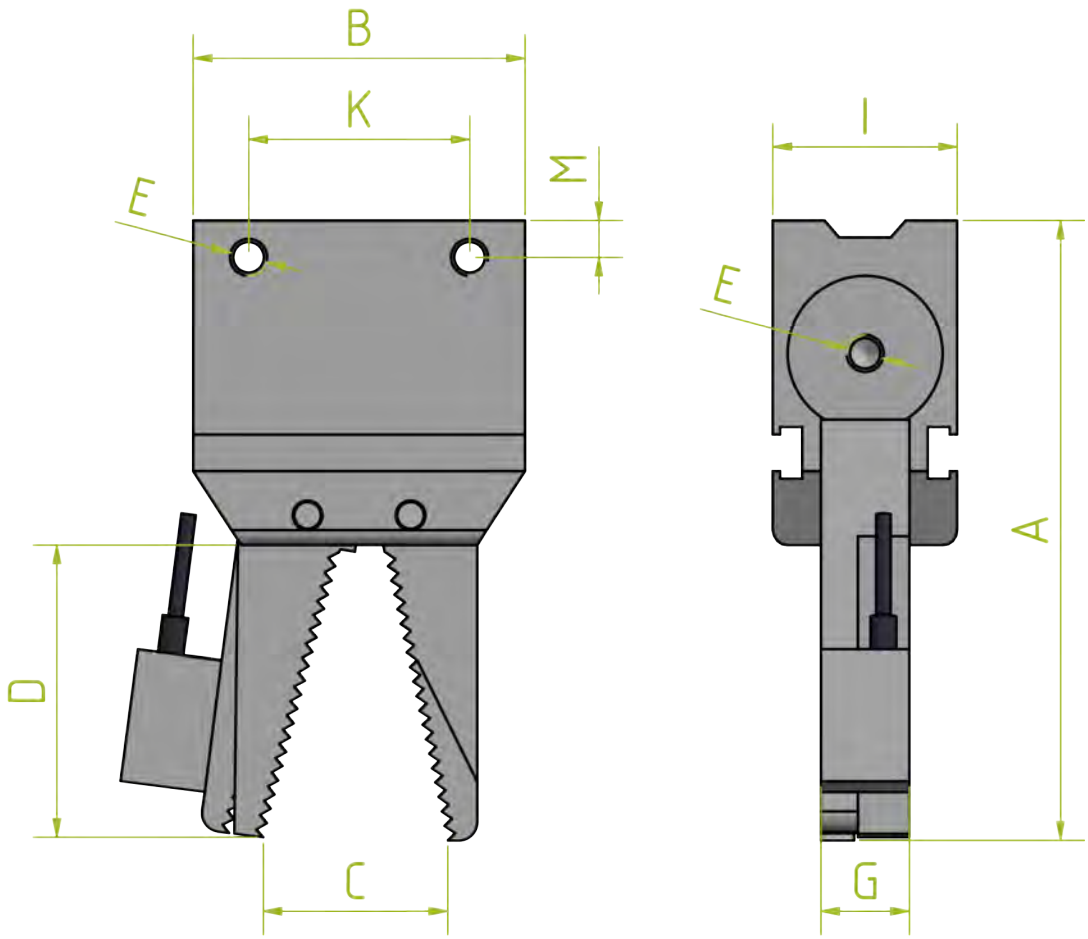

Numer katalogowy	A	B	C	D	E	G	I	J	K	M
MRMG-7010	84.0	45.0	25.0	40.0	M5.0	12.0	25.0	18.0	30.0	5.0

All measurements are in millimeters / Wymiary w milimetrach

Opcjonalnie z sensorem

Also available with sensor

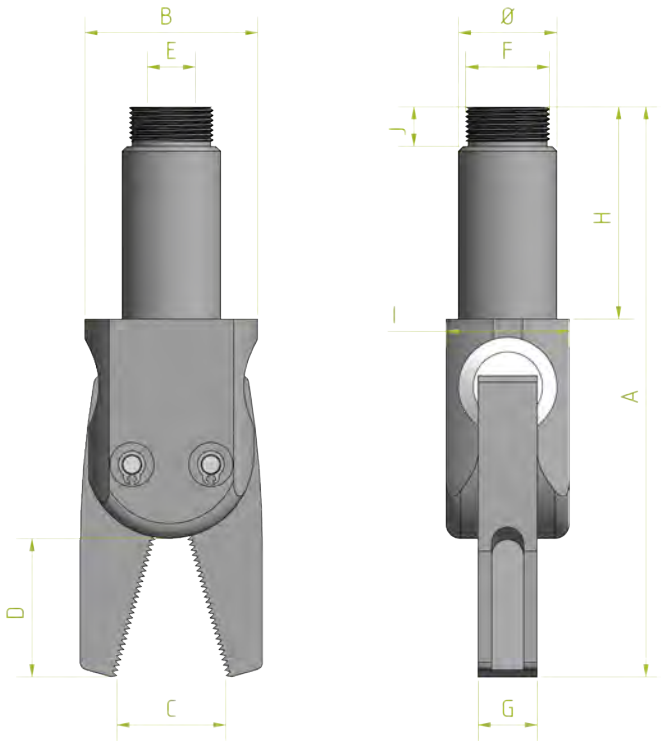

Numer katalogowy	Ø	A	B	C	D	E	F	G	H	I	J
MRGK-20012	20.0	115.5	35.0	22.0	28.0	G1/8"	M17x1	12.0	43.0	25.0	8.0

Opcjonalnie z sensorem

Also available with sensor

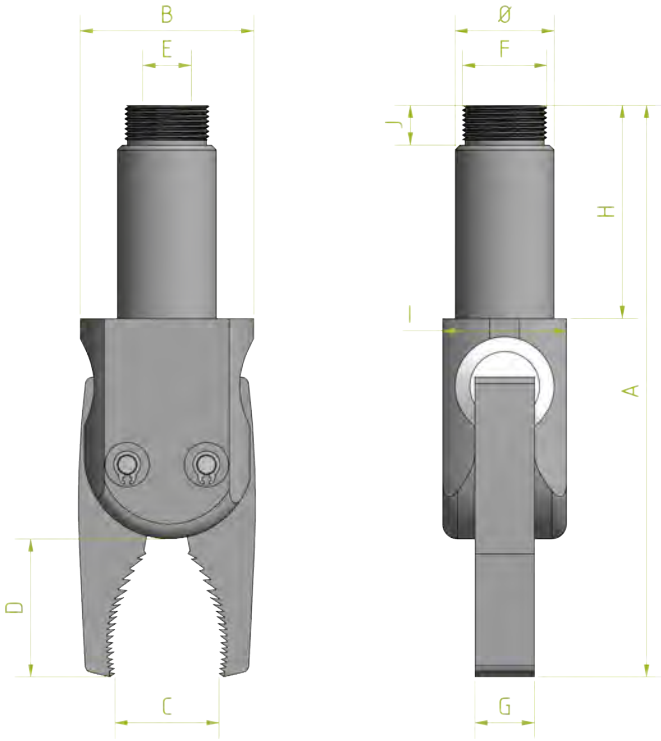

Numer katalogowy	Ø	A	B	C	D	E	F	G	H	I	J
MRGK-20013	20.0	115.5	35.0	21.0	28.0	G1/8"	M17x1	12.0	43.0	25.0	8.0

All measurements are in millimeters / Wymiary w milimetrach

Opcjonalnie z sensorem

Also available with sensor

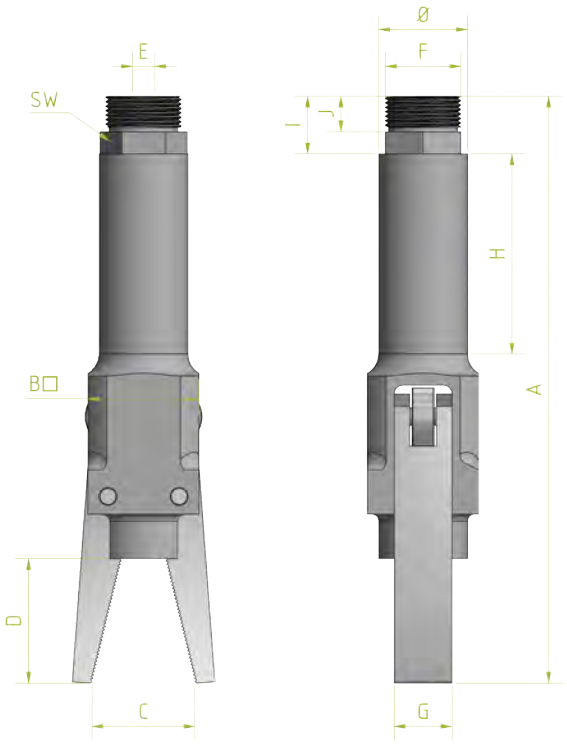

Numer katalogowy	Ø	A	B	C	D	E	F	G	H	I	J	SW
MRGK-140001	20.0	132.0	25.0	23.0	28.0	M5.0	M17x1	13.0	45.0	13.0	8.0	17.0

Opcjonalnie z sensorem

Also available with sensor



Numer katalogowy	Ø	A	B	C	D	E	F	G	H	I	J	SW
MRGK-140001BG	20.0	132.0	25.0	22.0	28.0	M5.0	M17x1	13.0	45.0	13.0	8.0	17.0

All measurements are in millimeters / Wymiary w milimetrach

Opcjonalnie z sensorem

Also available with sensor

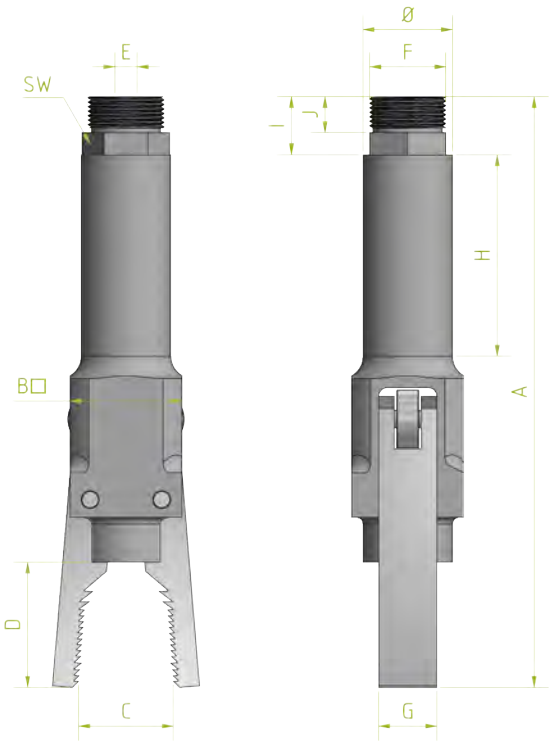

Numer katalogowy	Ø	A	B	C	D	E	F	G	H	I	J	SW
MRGK-140003	20.0	131.0	25.0	21.0	28.0	M5.0	M17x1	13.0	45.0	13.0	8.0	17.0

Opcjonalnie z sensorem

Also available with sensor

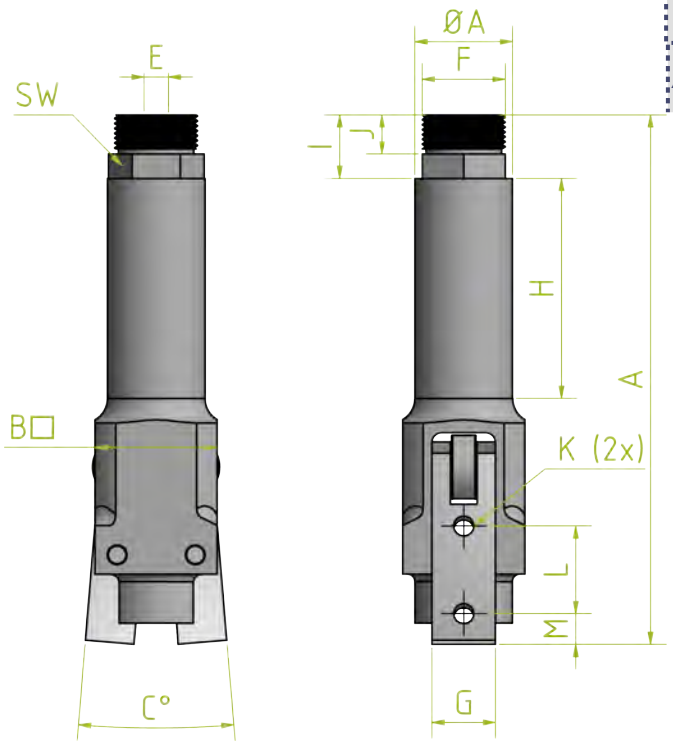

Numer katalogowy	Ø	A	B	C	E	F	G	H	I	J	K	L	M	SW
MRGK-140029	20.0	108.0	25.0	9.0	M5.0	M17x1	13.0	45.0	13.0	8.0	5.0	18.0	5.5	17.0

All measurements are in millimeters / Wymiary w milimetrach

Opcjonalnie z sensorem

Also available with sensor

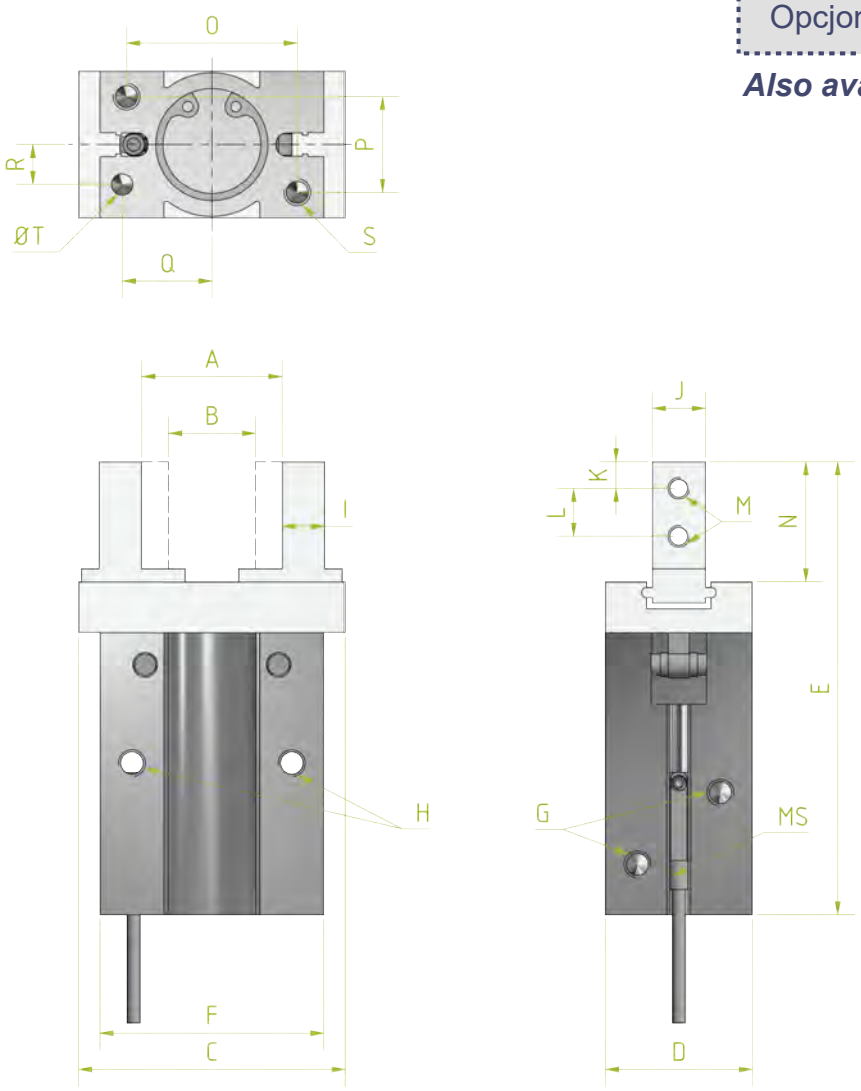

Artikel-Nr	A	B	C	D	E	F	G	H	I	J	K	L	M	N	O	P	Q	R	S	T
MRGK-17008	15.0	11.0	29.0	16.4	57.0	23.0	3.0	3.0	4.0	5.0	3.0	5.7	2.5	13.0	18.0	12.0	7.6	5.2	3.0	2.0
MRGK-17009	21.3	14.5	38.0	23.6	67.5	30.6	5.0	4.0	5.0	8.0	4.0	7.5	3.0	17.5	22.0	15.0	11.0	6.5	4.0	3.0
MRGK-17010	26.5	16.0	50.0	27.6	85.0	42.0	5.0	5.0	8.0	10.0	5.0	9.0	4.0	22.5	32.0	18.0	16.8	7.5	5.0	4.0
MRGK-17011	33.6	18.7	63.0	33.6	102.8	52.0	5.0	6.0	10.0	12.0	6.0	12.0	5.0	28.0	40.0	22.0	21.8	10.0	6.0	4.0
MRGK-17012	48.0	26.0	97.0	40.0	113.0	60.0	5.0	6.0	12.0	15.0	7.0	14.0	6.0	29.0	46.0	26.0	23.0	12.0	6.0	5.0
MRGK-17013	60.0	30.0	119.0	48.0	139.0	72.0	5.0	6.0	14.0	18.0	9.0	17.0	8.0	36.0	56.0	32.0	29.0	14.0	8.0	5.0

All measurements are in millimeters / Wymiary w milimetrach

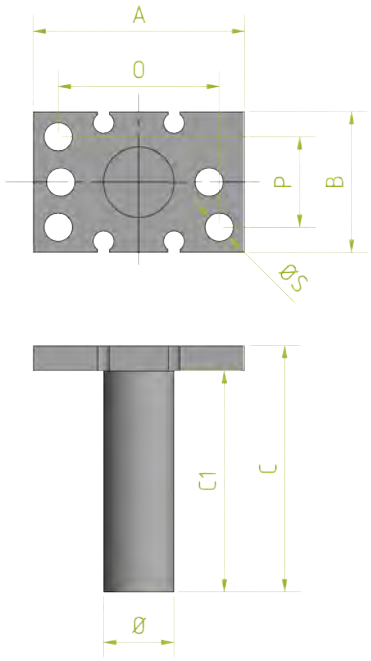

Numer katalogowy	Ø	A	B	C	C1	O	P	S
MRGK-17098	10.0	23.0	16.5	41.0	36.0	18.0	12.0	3.4
MRGK-17099	14.0	31.0	24.0	50.0	45.0	22.0	15.0	4.3
MRGK.17.100	14.0	42.0	28.0	49.0	44.0	32.0	18.0	5.5

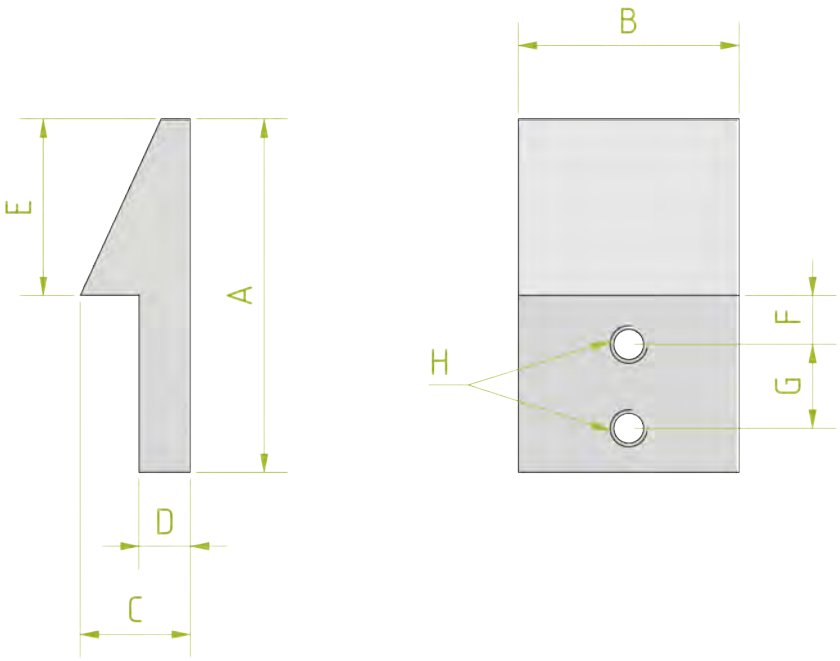

Numer katalogowy	A	B	C	D	E	F	G	H
MRGB-17008	24.0	15.0	7.5	3.5	12.0	3.3	5.7	M2.5
MRGB-17009	30.0	20.0	9.0	4.0	15.0	4.0	7.5	M3.0
MRGB-17010	34.0	20.0	9.0	4.0	15.0	5.5	9.0	M4.0

All measurements are in millimeters / Wymiary w milimetrach

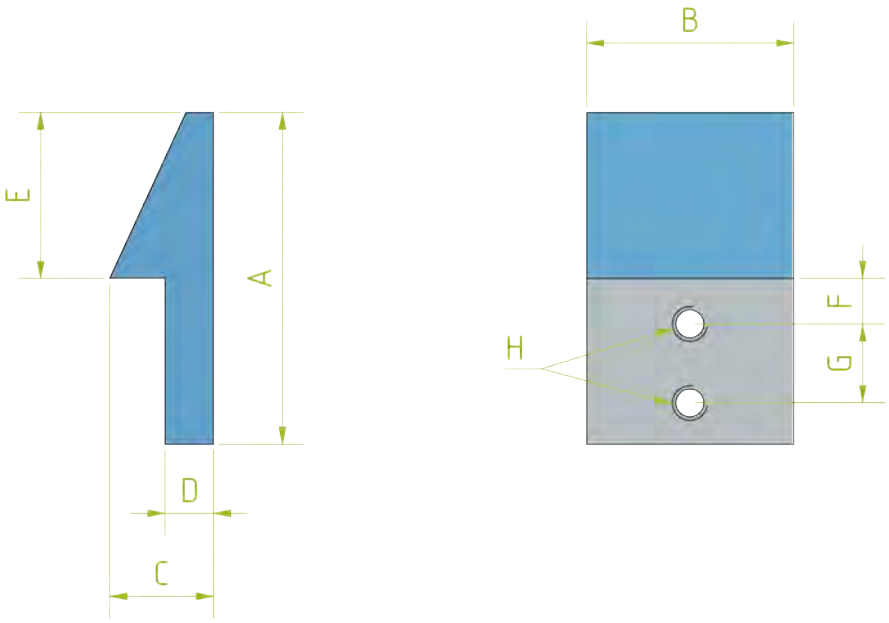

Numer katalogowy	A	B	C	D	E	F	G	H
MRGB-17008BS	24.0	15.0	7.5	3.5	12.0	3.3	5.7	M2.5
MRGB-17009BS	30.0	20.0	9.0	4.0	15.0	4.0	7.5	M3.0
MRGB-17010BS	34.0	20.0	9.0	4.0	15.0	5.5	9.0	M4.0
MRGB-17010BS-1	34.0	20.0	9.0	3.0	15.0	5.5	9.0	M4.0

All measurements are in millimeters / Wymiary w milimetrach

95°

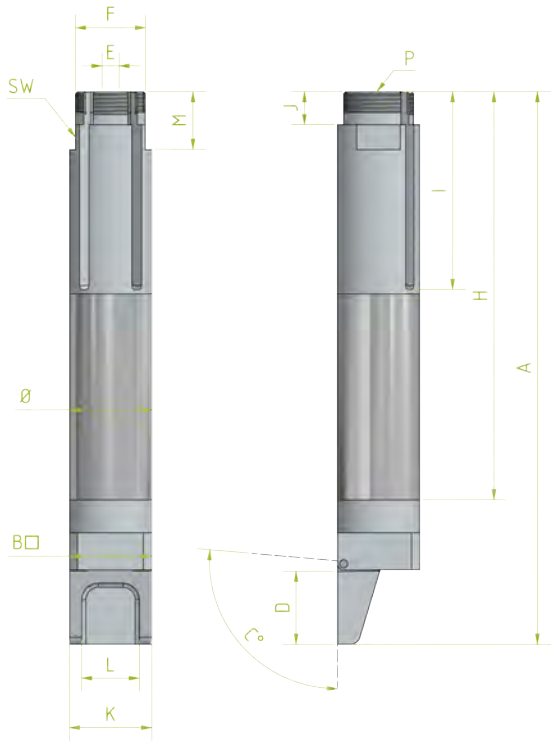

Numer katalogowy	Ø	A	B	C	D	E	F	H	I	J	K	L	M	SW
MRGK-19001	20.0	134.0	20.0	95.0	17.5	M5.0	M17x1	99.0	48.0	8.0	20.0	14.0	14.0	17.0

95°

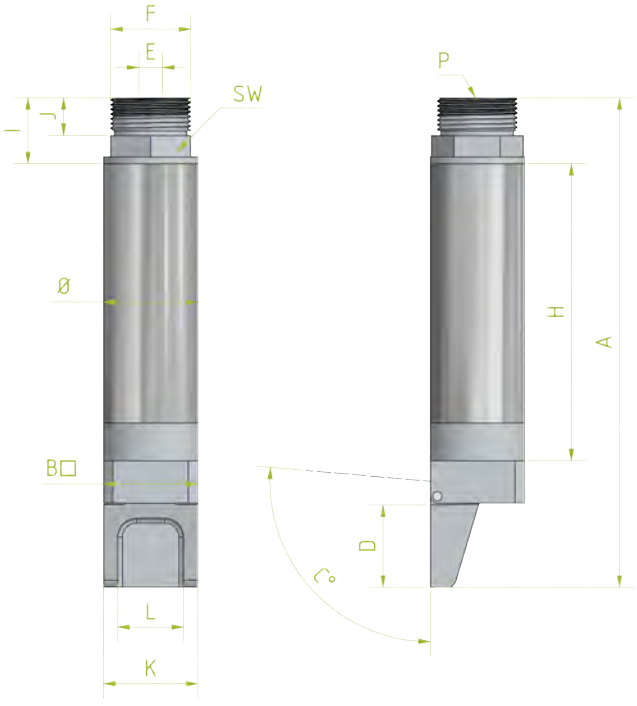

Numer katalogowy	Ø	A	B	C	D	E	F	H	I	J	K	L	SW
MRGK-19005	14.0	72.0	14.0	95.0	11.0	M5.0	M12x1	40.0	9.5	5.5	14.0	10.0	12.0
MRGK-19003	20.0	103.5	20.0	95.0	17.5	M5.0	M17x1	63.0	14.0	18.0	20.0	14.0	17.0

All measurements are in millimeters / Wymiary w milimetrach

35°

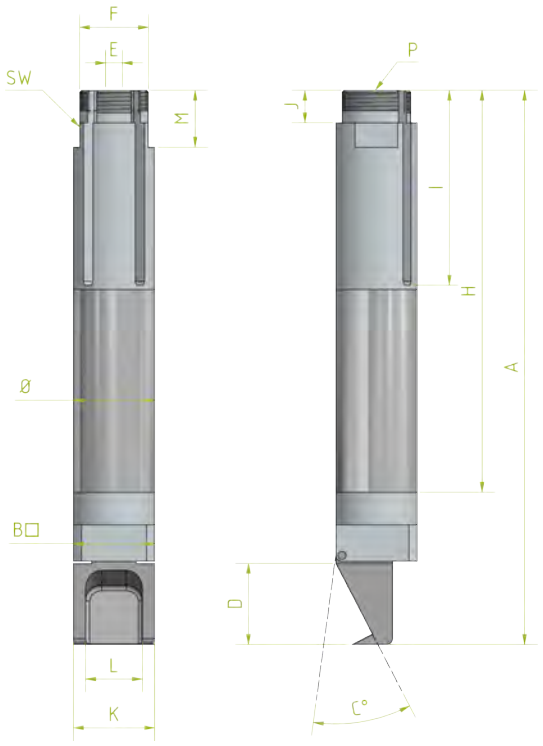

Numer katalogowy	Ø	A	B	C	D	E	F	H	I	J	K	L	M	SW
MRGK-19002	20.0	136.5	20.0	35.0	20.0	M5.0	M17x1	99.0	48.0	8.0	20.0	14.0	14.0	17.0

35°

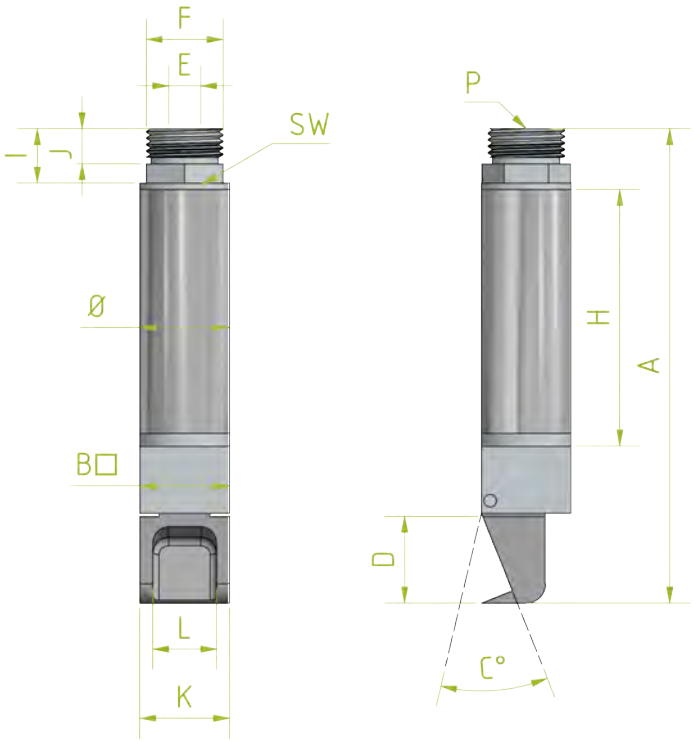

Numer katalogowy	Ø	A	B	C	D	E	F	H	I	J	K	L	SW
MRGK-19006	14.0	74.0	14.0	35.0	13.5	M5.0	M12x1	40.0	8.5	5.5	14.0	10.0	12.0

All measurements are in millimeters / Wymiary w milimetrach

MRGK-19011

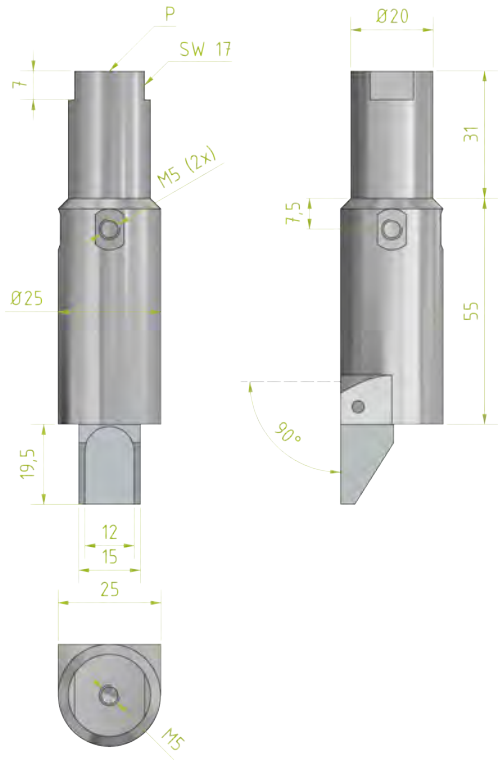

Pasujące podzespoły
-

Opcjonalnie z sensorem

Also available with sensor

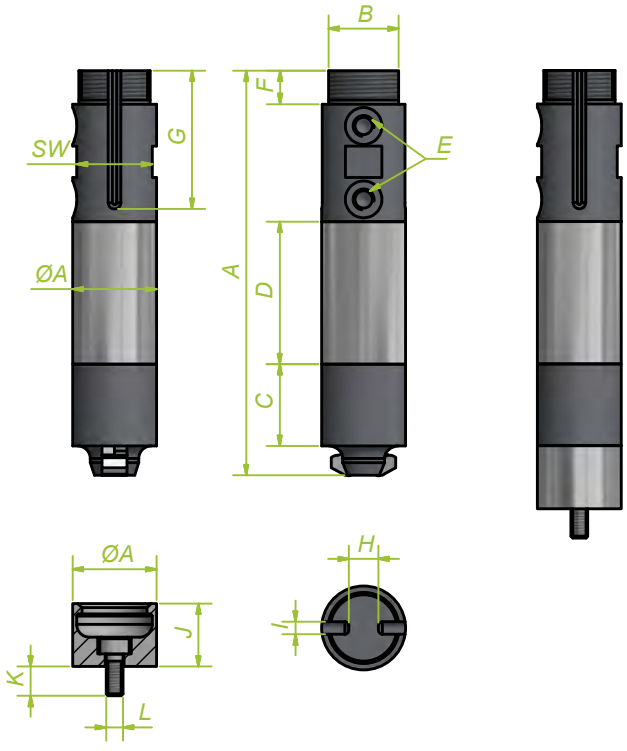

Numer katalogowy	ØA	A	B	C	D	E	F	G	H	I	J	K	L	SW
MRGK-140048	20.0	96.5	M17.1	19.5	34.0	5.0	8.0	33.0	7.0	3.0	15.0	7.0	4.0	18.0

All measurements are in millimeters / Wymiary w milimetrach

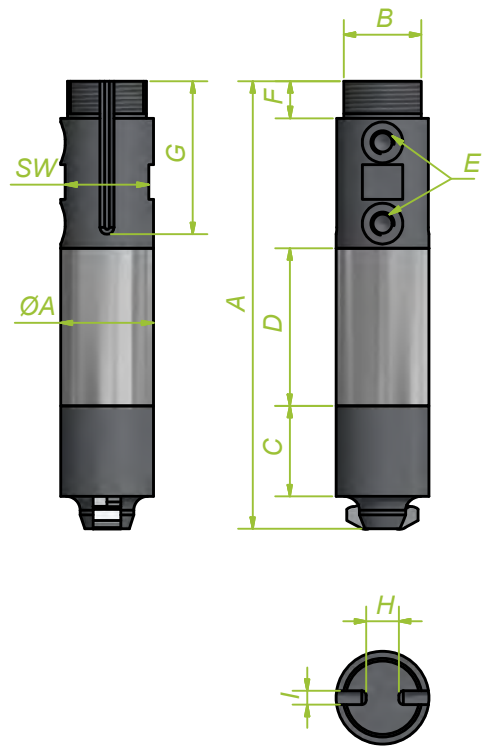

Numer katalogowy	ØA	A	B	C	D	E	F	G	H	I	J	K	L	SW
MRGK-140048-K	20.0	96.5	M17x1	19.5	34.0	M5.0	8.0	33.0	7.0	3.0	15.0	7.0	M4.0	18.0

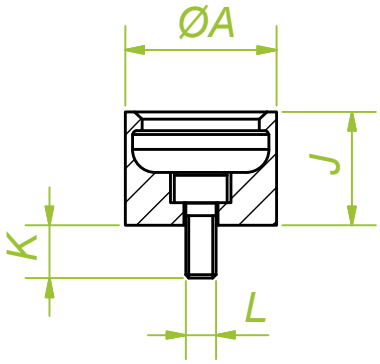

Numer katalogowy	ØA	J	K	L
MRGK-140048-S	20.0	15.0	7.0	M4.0

All measurements are in millimeters / Wymiary w milimetrach

Opcjonalnie z sensorem

Also available with sensor

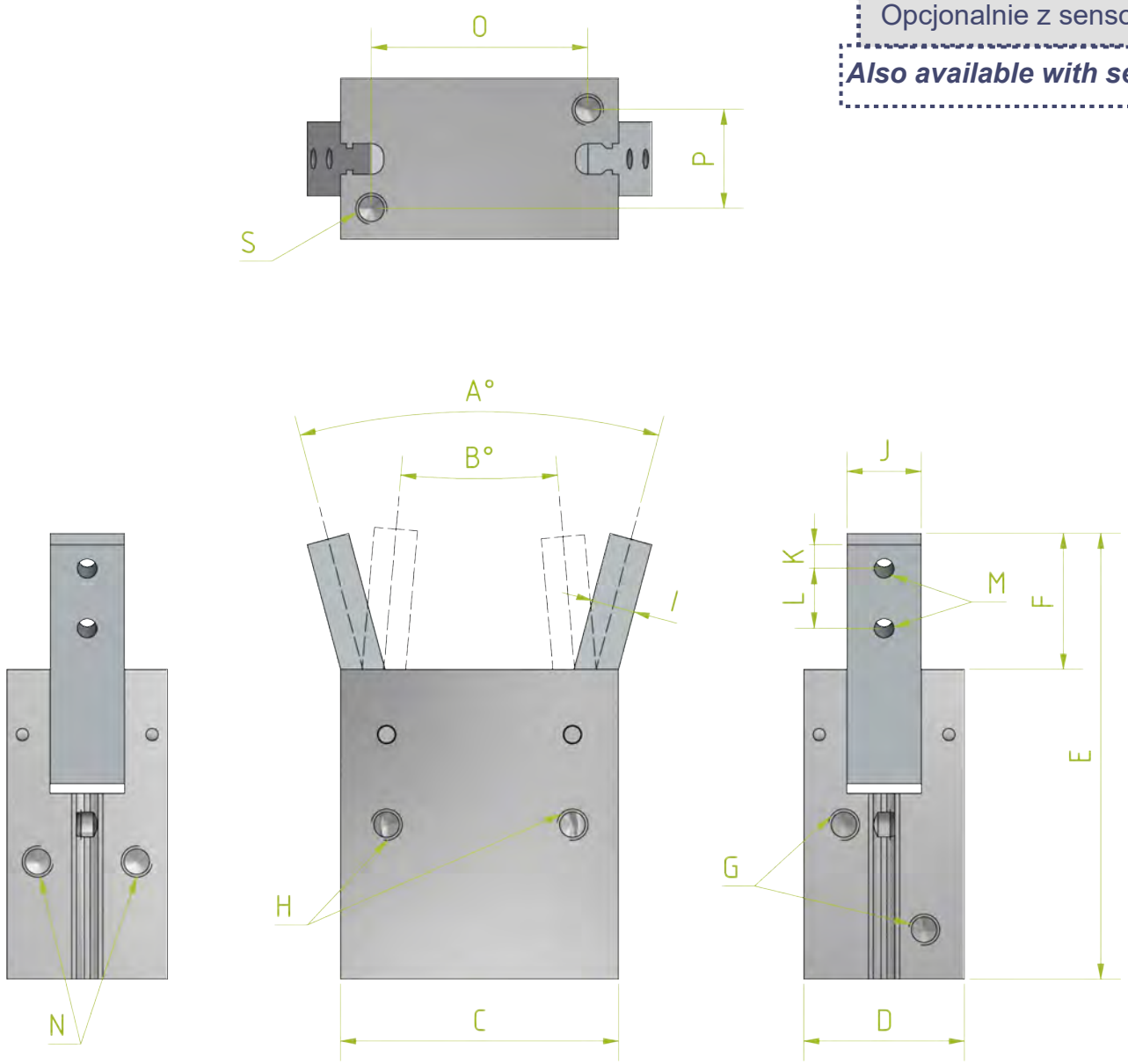

Numer katalogowy	A	B	C	D	E	F	G	H	I	J	K	L	M	N	O	P	S
MRGK-18001	30.0	10.0	28.0	16.0	54.4	15.4	M3x5	20.0	5.0	7.0	3.0	6.0	M3.0	M3x5	22.0	10.0	M3x5
MRGK-18002	30.0	10.0	34.0	22.0	60.0	17.5	M5x5	24.0	6.0	9.0	3.0	8.0	M3.0	M4x7	26.0	14.0	M4x7
MRGK-18003	30.0	10.0	45.0	26.0	72.0	22.0	M5x5	30.0	7.0	12.0	4.0	10.0	M4.0	M5x8	35.0	16.0	M5x8

All measurements are in millimeters / Wymiary w milimetrach

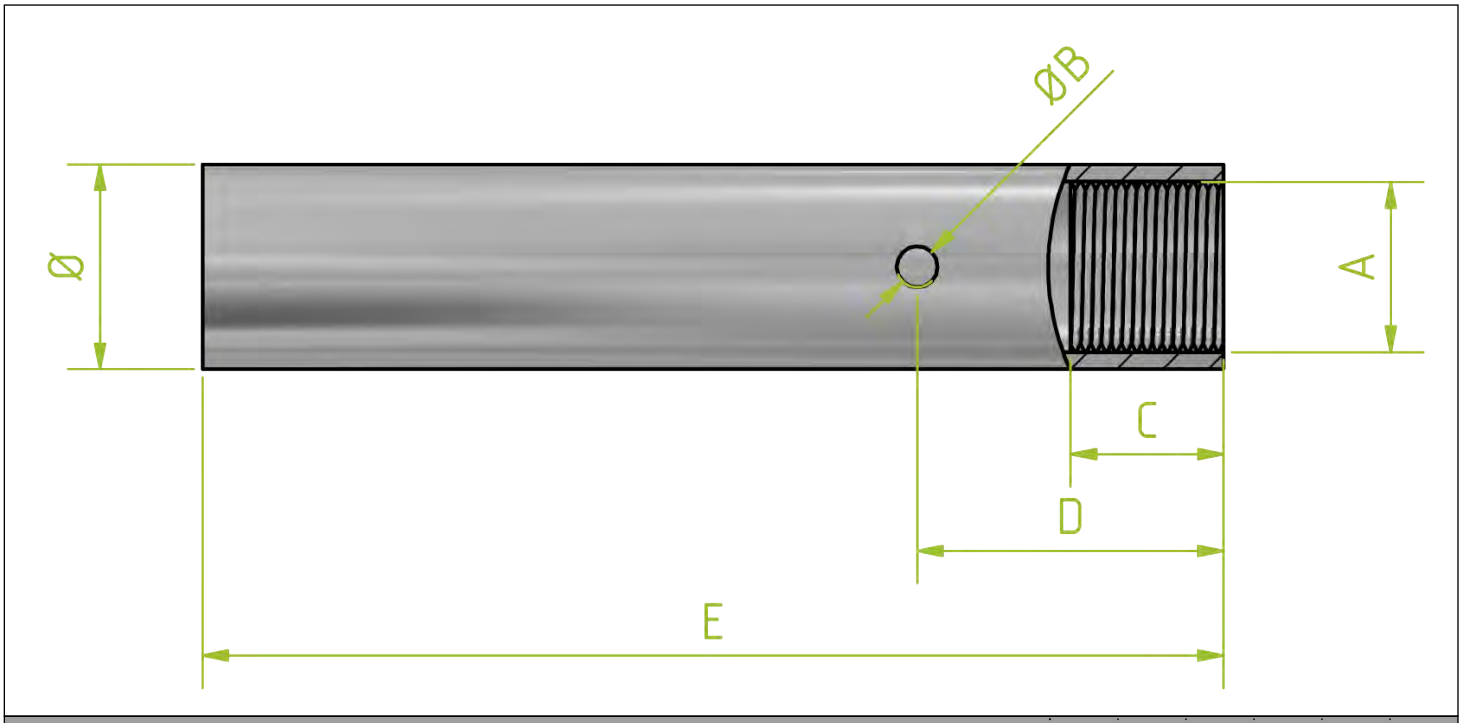

Numer katalogowy	Ø	A	B	C	D	E
MRGK-16001	10.0	M8x1	5.0	13.0	25.0	100.0
MRGK-16002	14.0	M12x1	4.0	10.0	30.0	100.0
MRGK-16003	20.0	M17x1	4.0	15.0	30.0	100.0

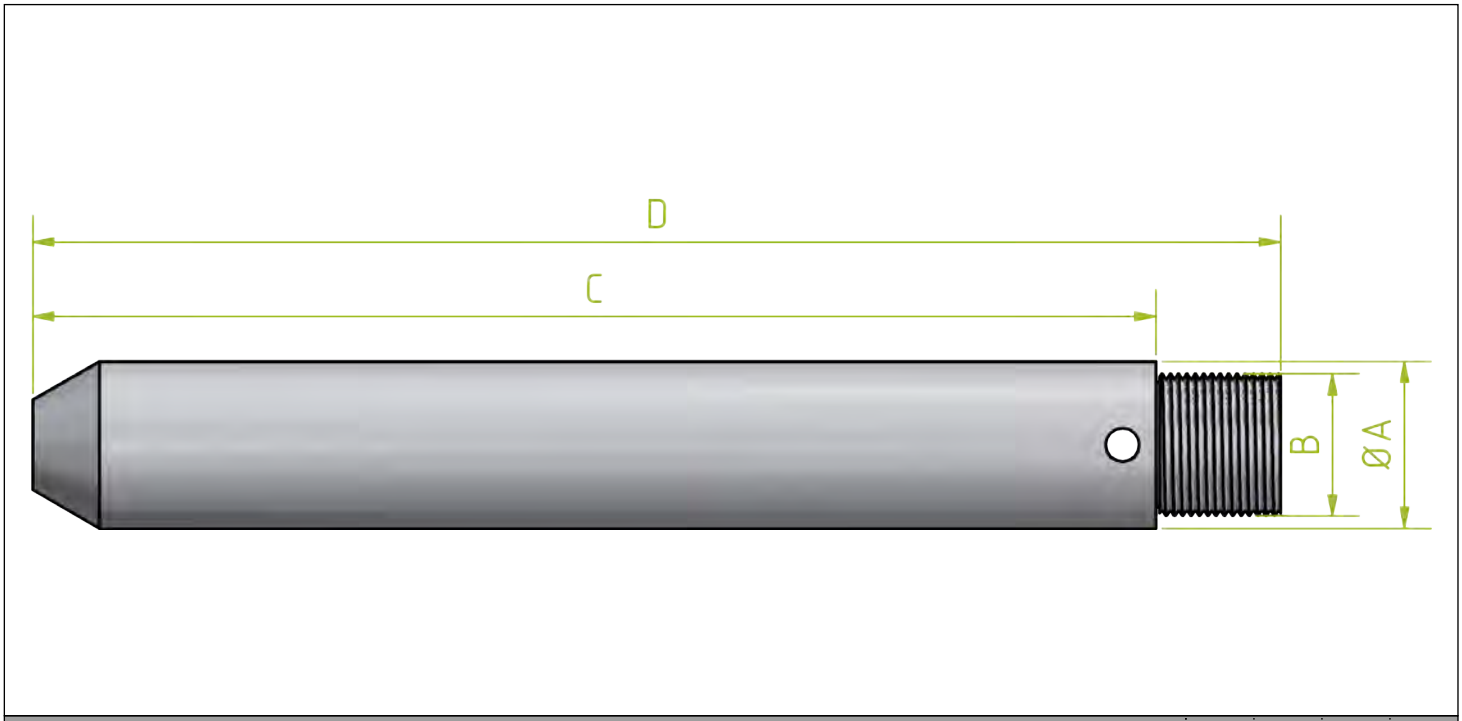

Numer katalogowy	A	B	C	D
MRGK-15001	10.0	M8x1	40.0	50.0
MRGK-15002	14.0	M12x1	85.0	100.0
MRGK-15003	20.0	M17x1	135.0	150.0

All measurements are in millimeters / Wymiary w milimetrach

MRGK-12001

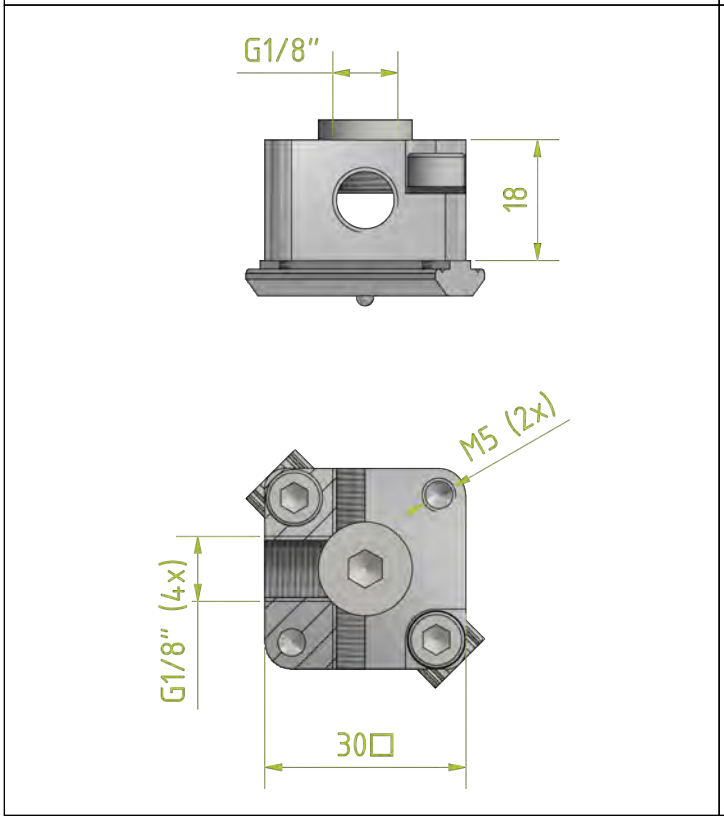

MRGK-12002

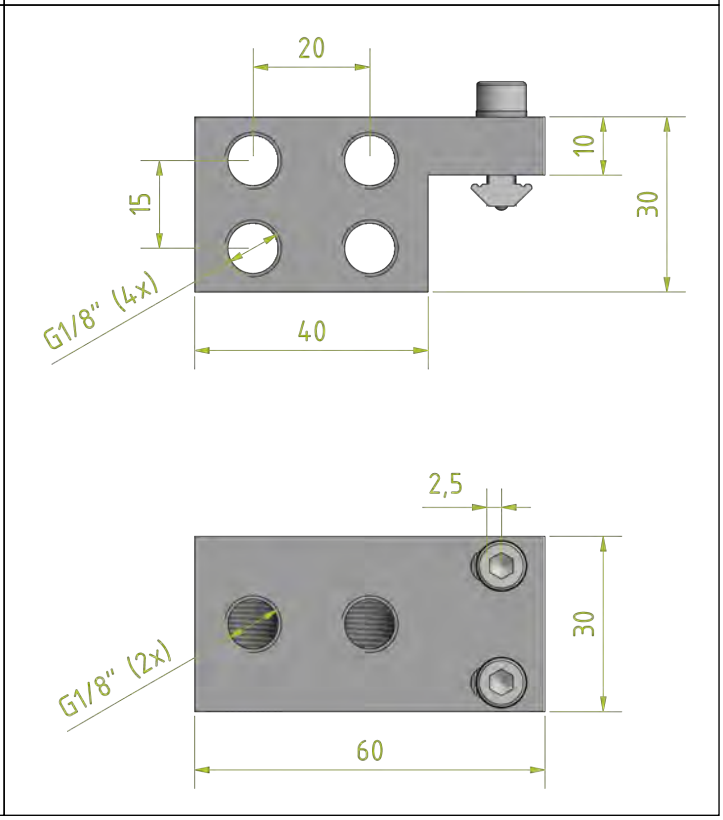

MRGK-12003

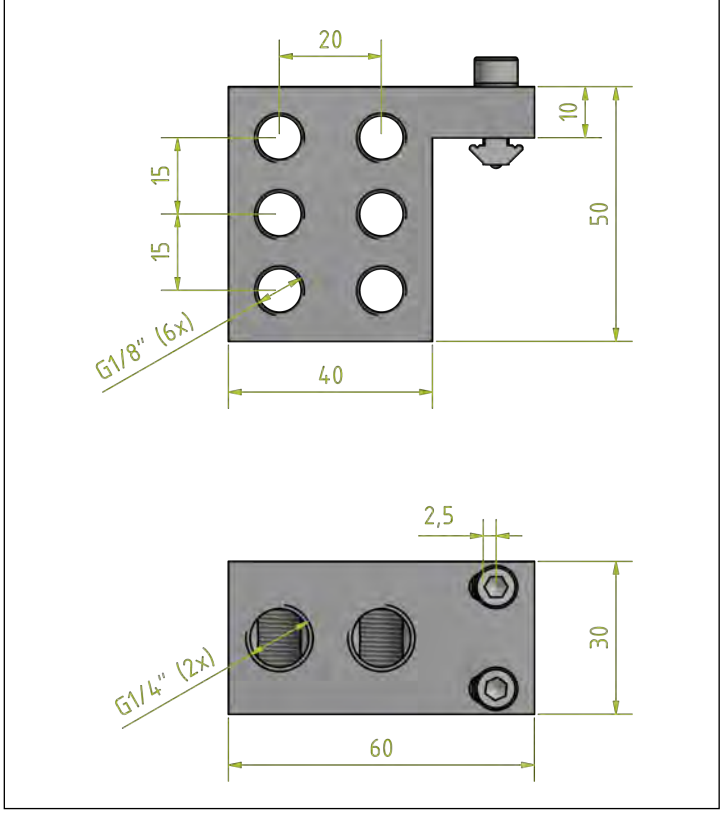

All measurements are in millimeters / Wymiary w milimetrach